Roof hook Optimum
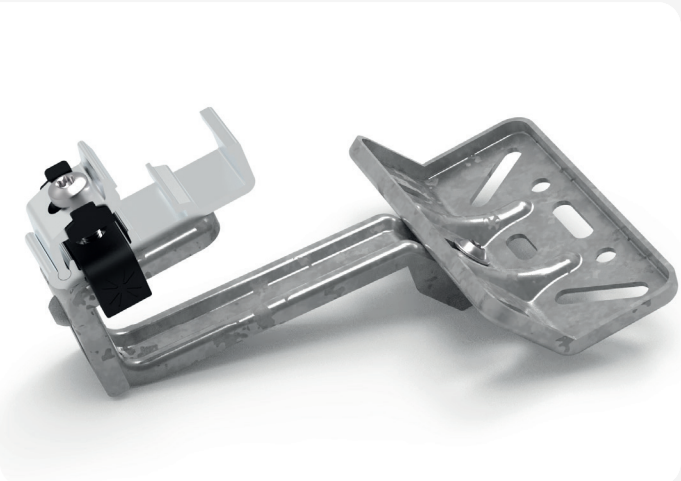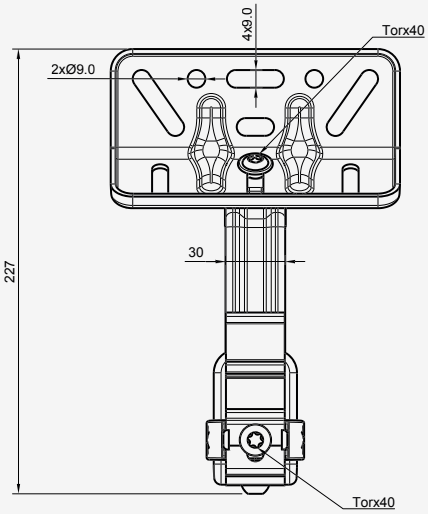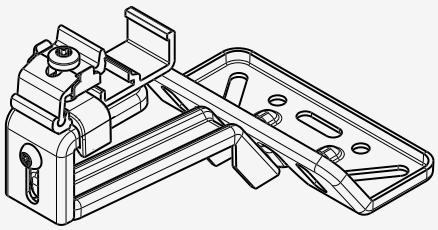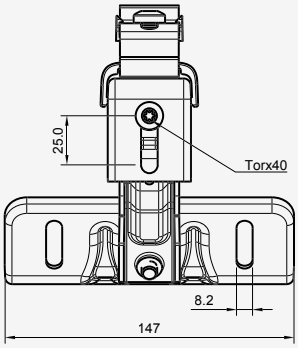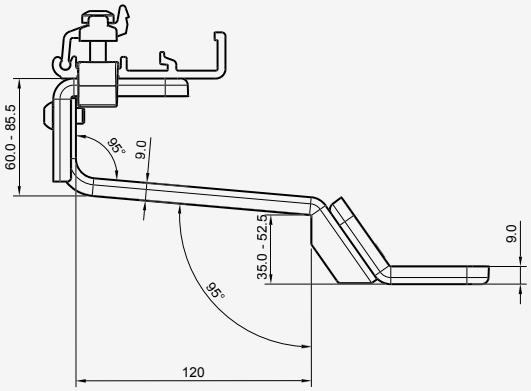
Article code	1HME15DD009
Material	ZAM coated steel, aluminium
Color	steel
Weight	663 gr
Application	tiled roof
Packaging	30 pcs/carton, 1.200 pcs/pallet